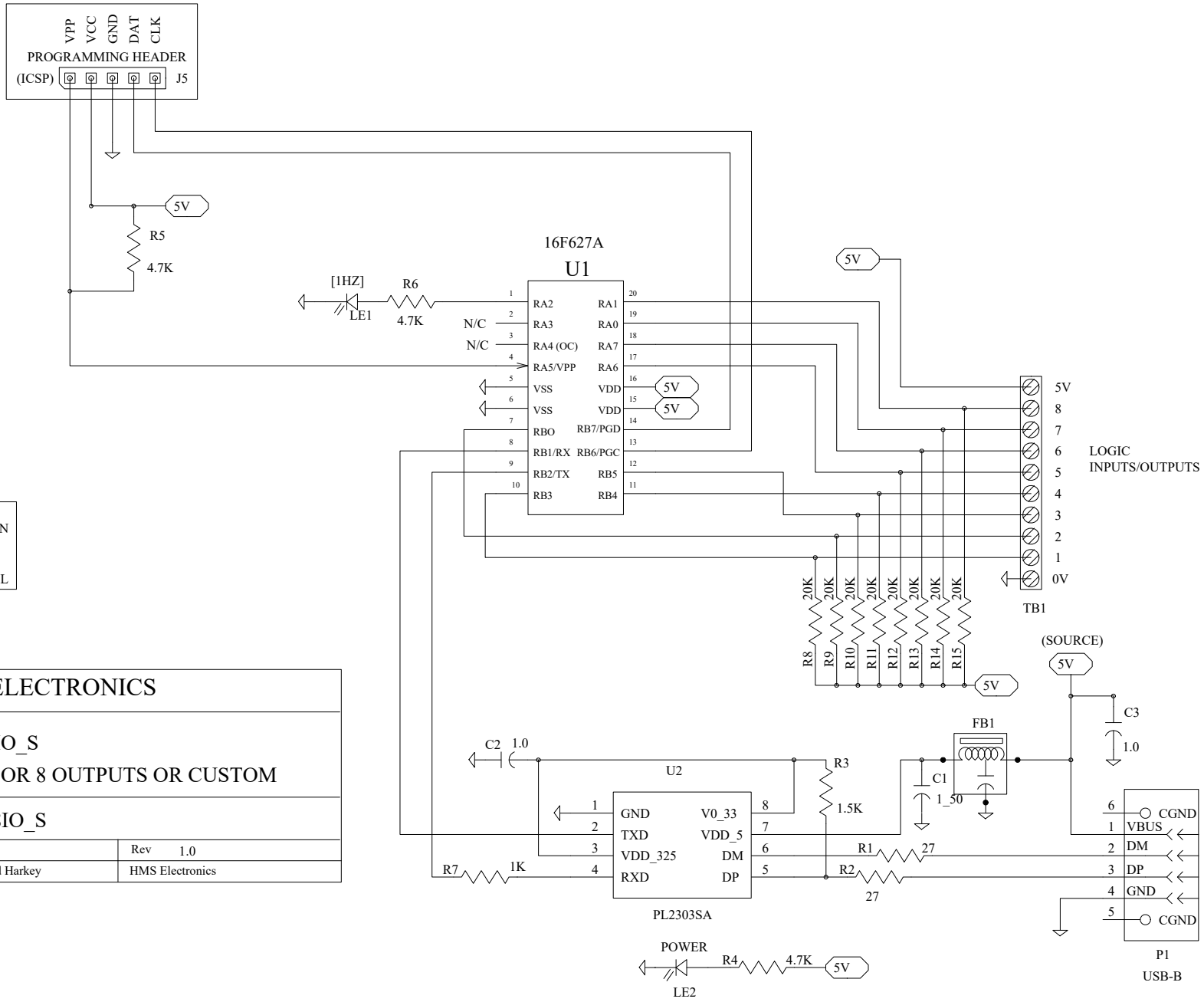

Comp.	HMS ELECTRONICS
name	USB_A_8IO_S 8 INPUTS OR 8 OUTPUTS OR CUSTOM
no.	USB_A_8IO_S
Org 05/06/2023	Rev 1.0
Engineer Richard Harkey	HMS Electronics